(1)

$I_{R_1} = 40mA$

$I_{R_2} = 40mA - 10mA = 30mA.$

$I_{R_3} = 30mA - 20mA = 10mA.$

$I_{R_5} = 40mA$

$I_{R_4} = 40mA - 4mA = 36mA.$

$$R_1 = \frac{V_{R_1}}{I_{R_1}} = \frac{120-100}{40mA} = 0.5k\Omega.$$

$$R_2 = \frac{V_{R_2}}{I_{R_2}} = \frac{100-40}{30mA} = 2k\Omega.$$

$$R_3 = \frac{40V}{10mA} = 4k\Omega.$$

$$R_4 = \frac{36V}{36mA} = 1k\Omega.$$

$$R_5 = \frac{60V-36V}{40mA} = 0.6k\Omega.$$

(2)

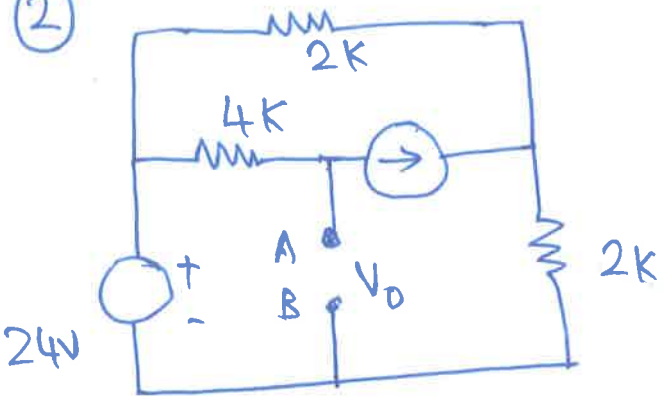

$R_{Th} = R_N$.

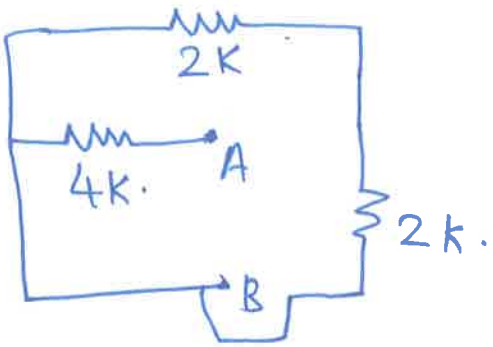

$R_{AB} = R_{Th} = R_{4k} = 4k\Omega$.

(3)

I'_{AB} : using 24V:

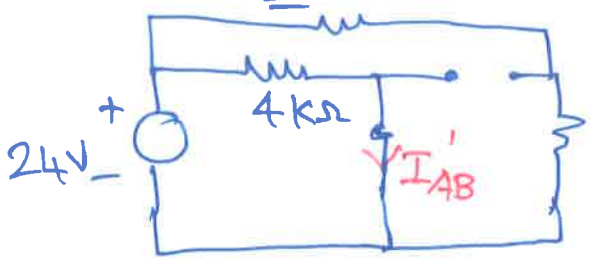

I''_{AB} using 2mA:

$I_{AB'} = \frac{24}{4k} = 6mA$.

$I''_{AB} = -2mA$.

$I_{AB} = 6 - 2 = 4mA$.

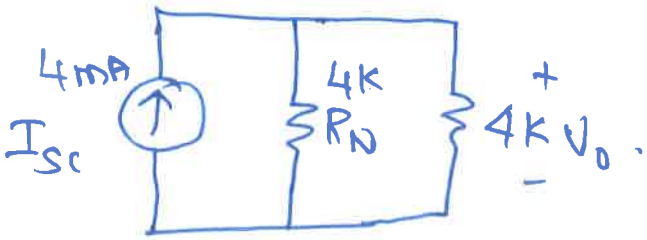

$I_{4K} = 2mA$ (5)

$V_0 = 4k \times 2mA = 8V$.

(2)

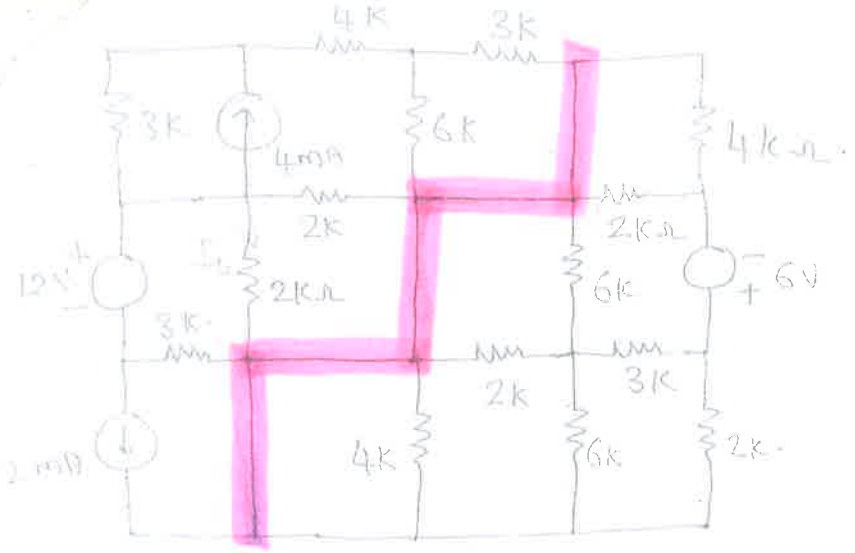

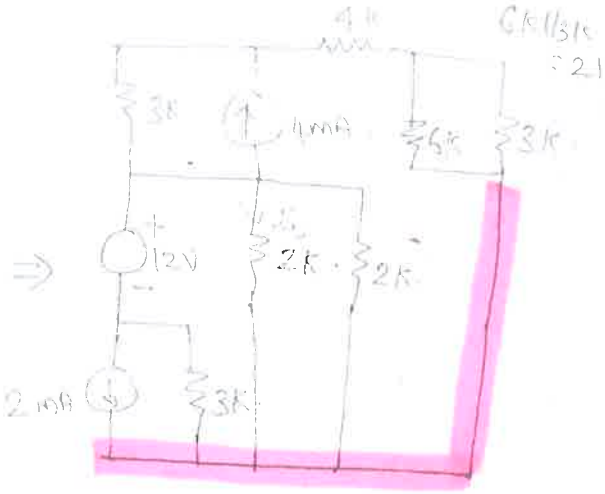

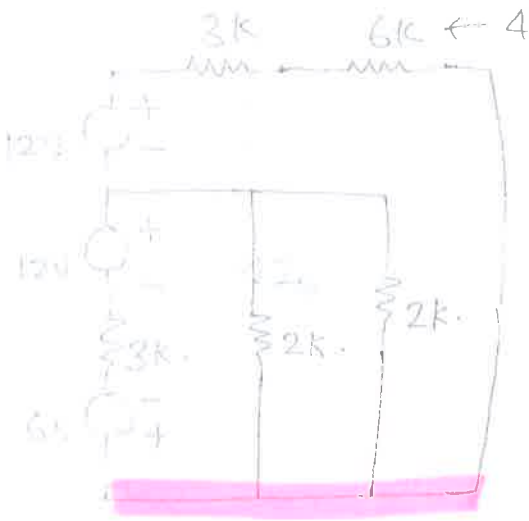

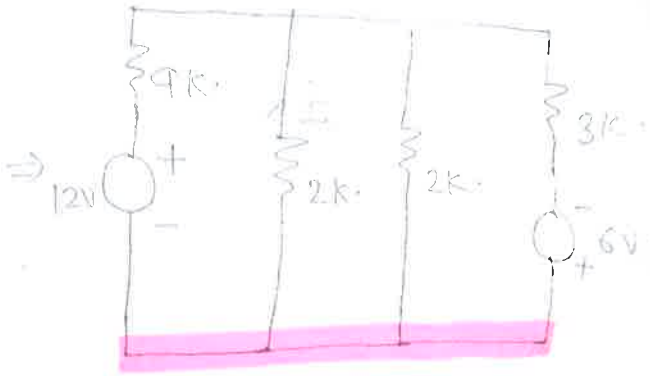

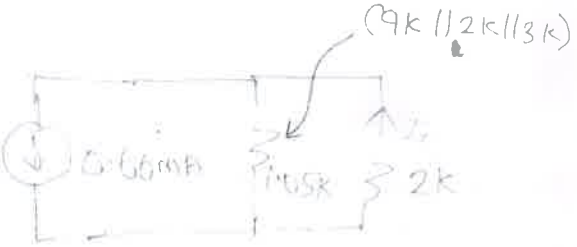

$$I_{2K} = 0.66\,mA \cdot \frac{1.05\,K}{3.05\,K} = 0.2292\,mA$$

(3)

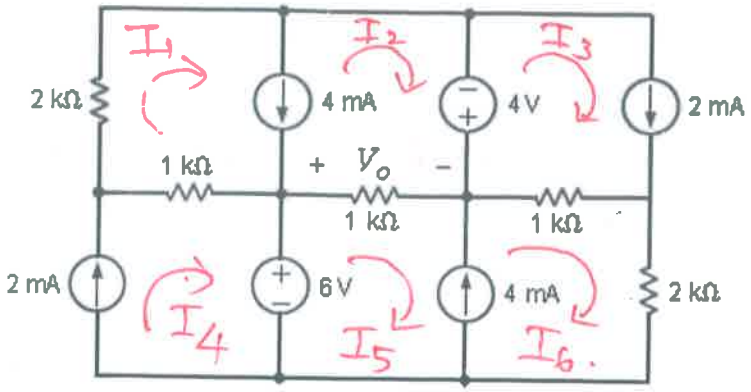

SN1: $I_1(2k+1k) - I_4(1k) + I_2(1k) - I_5(1k) = 4V \rightarrow (1)$

L1+L2:-

L3 $\Rightarrow$ $I_3 = 2mA$

L4 $\Rightarrow$ $I_4 = 2mA$

L5+L6 $\Rightarrow$ $I_5(1k) + I_6(3k) - I_2(1k) - I_3(1k) = 6V.$

$I_1 - I_2 = 4mA.$

$I_6 - I_5 = 4mA.$

4 5

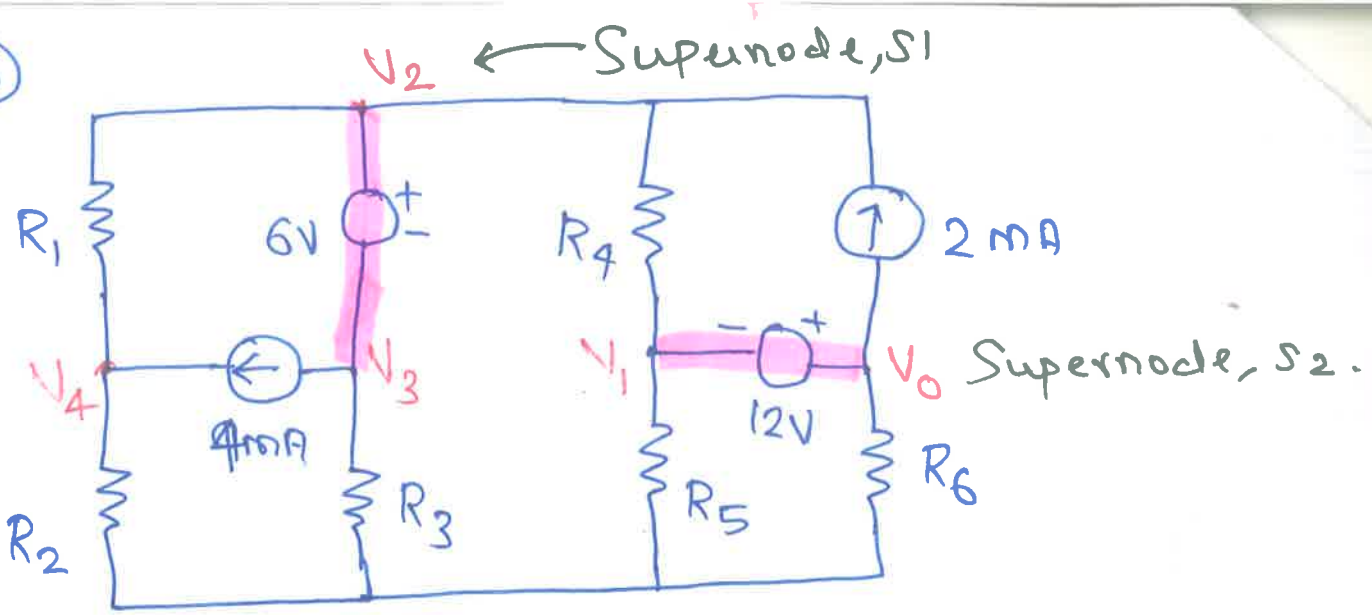

$R_1 = R_2 = 2k\Omega$

$R_3 = R_5 = 1k\Omega = R_4 = R_5 = R_6.$

S1: $V_2 - V_3 = 6V.$ — (1)

S2: $V_0 - V_1 = 12V$ — (2)

KCL @ S1:

$$\frac{V_3}{R_3} + \frac{V_2 - V_4}{R_1} + \frac{V_2 - V_1}{R_4} = 2mA - 4mA$$

$$-2V_1 + 3V_2 + 2V_3 - V_4 = -4 \quad — (3)$$

KCL @ S2:

$$\frac{V_1 - V_2}{R_4} + \frac{V_1}{R_5} + \frac{V_0}{R_6} = -2\times10^{-3}$$

$$2V_1 + V_0 - V_2 = -2 \quad — (4).$$

KCL @ V_4:

$$\frac{V_4 - V_2}{R_1} + \frac{V_4}{R_2} = 4\times10^{-3}.$$

$$2V_4 - V_2 = 8$$

$$V_4 = 4 + \frac{V_2}{2} \quad \text{—} \quad (5)$$

(1), (2), (5) in (3) $\Rightarrow$.

$$-2[V_0 - 12] + 3V_2 + 2[V_2 - 6] - \left[\frac{V_2}{2} + 4\right] = -4. \rightarrow (6)$$

(2) in (4) $\Rightarrow$.

$$\cancel{2V_1 + V_0} - 2(V_0 - 12) + V_0 - V_2 = -2.$$

$$2V_0 + V_0 - 24 - V_2 = -2.$$

$$\cancel{3V_0 = 22 + V_2}. \quad V_2 = 3V_0 - 22$$

V_2 in (6) $\Rightarrow$.

$$-2V_0 + 24 + 5V_2 - 12 - \frac{V_2}{2} + 4 = -4.$$

$$-2V_0 + 12 + 5(3V_0 - 22) - (1.5V_0 - 11) + 4 = -4.$$

$$13V_0 + 12 - 110 + 11 - 1.5V_0 = 0$$

$$11.5V_0 = 87$$

$$\boxed{V_0 = 7.565\ V.}$$